Working capacity		
Max. workpiece swing	1 950	mm
Max. turning diameter	1 500	mm
Min. boring diameter	140	mm
Max. workpiece height	1 250	mm

Travels		
X-axis (cross rail)	1 400	mm
Y-axis (slide)	1 500	mm
Z-axis (ram)	1 250	mm
C-axis (clamping plate) / increment	360° / 0.001°	
Max. feedrate	20 000	mm/min.
Rapid traverse	30	m/min.
Acceleration	5	m /sec²

Accuracy (VDI/DGQ 3441)		
Positioning accuracy (P)	0.012	mm
Repeatibility (Ps max.)	0.006	mm
C-axis positioning accuracy	± 3"	

Clamping plate		
Plate diameter	1 250	mm
Max. load	6 000	kg
Max. speed	630	rpm
Main motor power / S2 -30 min.	60 / 84	kW
Max. torque / S2 - 30 min.	14 600 / 20 500	Nm
C-axis max. speed	6	rpm
C-axis max. torque	10 000	Nm

Rotary tool drive		
Max. speed	6 500	rpm
Continuous power / S6-40%	38 / 48	kW
Max. torque / S6-40%	300 / 384	Nm

Automatic tool change system		
Max. number of tool heads	10	
Tool taper	ISO 50	
ATC capacity	45	
Max. tool diameter - full magazine	125	mm
- adjacent pocket empty	250	mm
Tool length	350	mm
Max. tool weight	20	kg

Services		
Mains	3 x 400 V / 50 Hz	
Power input	100	kVA
Compressed air	0.6 - 0.8	MPa

Dimensions		
Floor space	6 400 x 6 250	mm
Max. height	5 400	mm
Machine weight	35 000	kg

Control	SINUMERIK 840D

STANDARD EQUIPMENT

- SINUMERIK 840D control
- SIEMENS digital drives
- Absolute linear scales
- Through-spindle coolant
- Through-spindle cooling unit with filtration
- Clamping plate
- Cooling unit - tool coolant system
- Swarf conveyor

OPTIONAL EQUIPMENT

- Three-jaw or four-jaw chuck plate
- Tool heads
- High pressure cooling equipment
- ATC capacity - 65, 85 or 120 tools
- Air suction unit
- Workpiece probe
- Tool probe
- Wheel dresser
- Spin window
- Upper, lower washing-off
- Cutting process monitoring
- Remote diagnostic
- Electronic handweel
- Coordinate system transformation

CLAMPING PLATE POWER AND TORQUE DIAGRAM

SIEMENS motor 1PH7 186N, 60 kW.
Two-speed planetary gearbox.

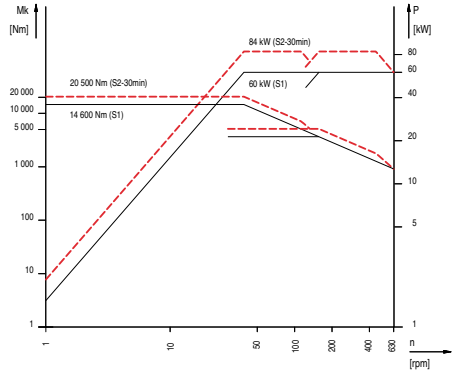

SPINDLE POWER AND TORQUE DIAGRAM

SIEMENS motor, 38 kW.

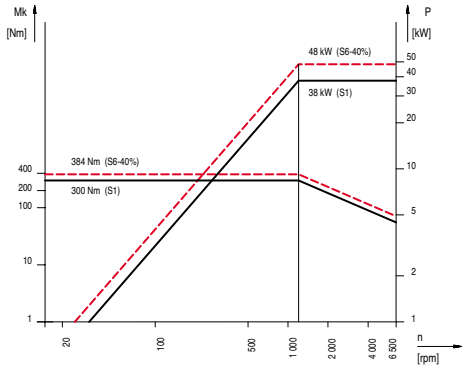

Description, illustrations and numerical data may not always correspond with the machine latest version.

Gantry-Type Multipurpose Machining Centre

TURNMILL 1250

No compromising at complex machining

- Utmost flexibility
- Top dynamics and cutting power
- Top rigidity and damping capacity
- High performance
- Long-lasting high accuracy

TAJMAC

TURNMILL 1250

presents original design of new generation multi-purpose machining centre.
Gantry - type machine with movable cross rail has 4 controlled axes in standard version:

- X-axis – cross rail longitudinal travel
- Y-axis – slide cross travel
- Z-axis – ram vertical travel
- C-axis – clamping plate rotary axis

Angular milling head, tilting in X-Z plane extends the number of controlled axes to five - B axis.

Tool pick-up
Vertical - straight head

Chain Tool Magazine
45 tool capacity

TECHNOLOGICAL CAPACITY

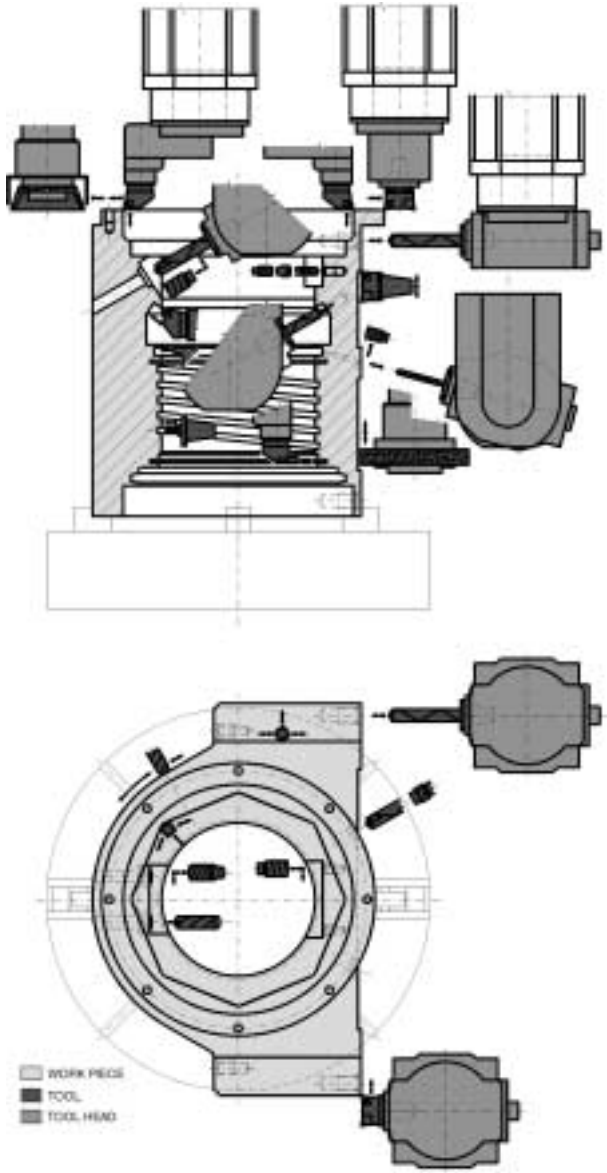

Vertical Turning Head

Horizontal Angle Head
Side milling

Vertical Straight Head
Face milling

Boring Bar

Unrivalled machine flexibility based on a variable system of automatic tool heads and cutting tool change enables following configurations within the automatic cycle:

- Vertical turning centre
- Horizontal machining centre
- Vertical machining centre

Grinding head increases number of operations by plane surface and general surface grinding.

5th Controlled Axis

NC milling head with continuous tilting movement in rotary B-axis. Possibility of setting the optimum angle of driven tool inclination to the machined surface. Machining of complicated spatial shapes by interpolation of movements of B-axis with X, Y, Z linear axes, or rotary C-axis.

Range of tilting in B-axis	± 135° from vertical plane
Positioning accuracy	± 5"
Max. torque in B-axis/overloading	800/1 350 Nm

Grinding Head

TAJMAC – ZPS